THE LIMA DARK OIL RUBBED BRONZE SHOWER SYSTEM, RECESSED LED RAIN SHOWER HEAD SPECIFICATIONS

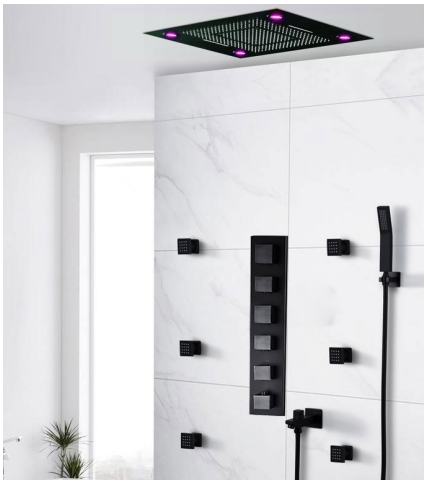

Shower Head

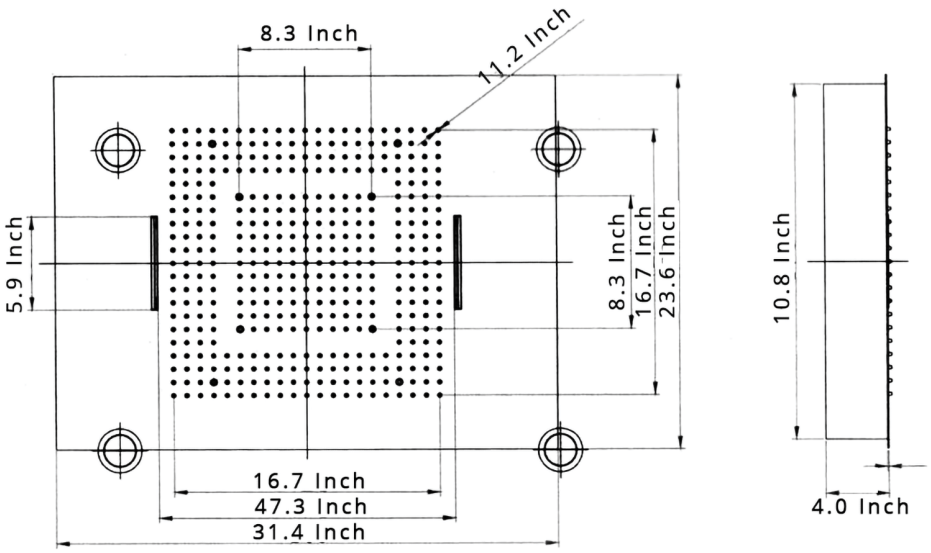

Surface Finishing: Matt Black
Surface Treatment: Blackened
Style: Contemporary
Shower Head Feature: LED Shower Heads
Shower shape: Square
Material: 304 SUS and brass
Cold/Hot Water Control Type: Auto-Thermostat Control
Led Power: Need Electricity 100-250v
Showerhead Size: 600 X 800 X 100 Mm
Led: Remote Control Multicolor Change
Function: Rain , Waterfall, Curtain
Brass Matt Black Mixer: 5+1 Thermostatic High Flow Valve
Water Pressure: 0.1-0.5mpa
Showerhead Material: 304 Sus Matt Black

Body Jets

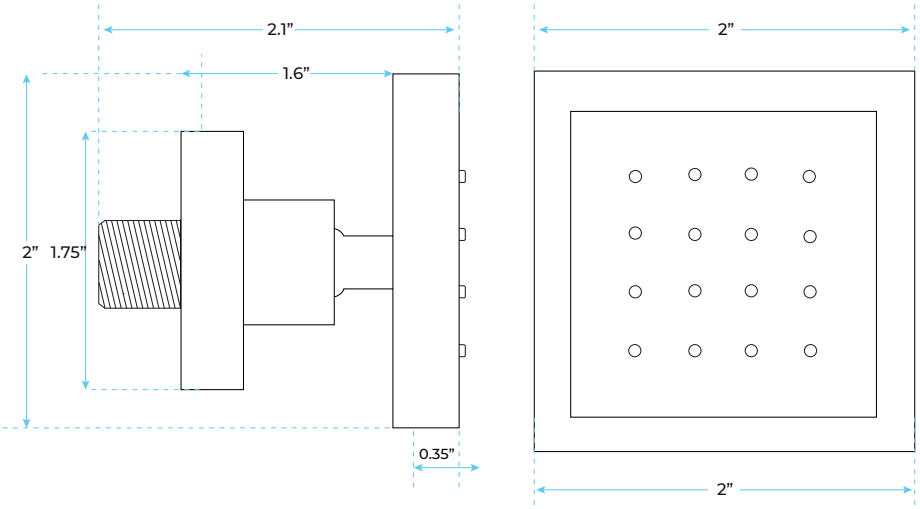

Thread Interface Size: G 1/2 Inch
Function: Rainfall
Shower Head Feature: Water Saving Shower Heads
Type: Fixed Rotatable Type
Installation Type: Wall Mounted
Size: 50* 50 mm (2 inch)
Material: Brass
Feature: Can rotate 360 degrees
Flow Rate: 1.5 GPM / 5.7 LPM (each Bodyspray)

All dimensions and specifications are nominal and may vary. Use actual products for accuracy in critical situations.

Shower Mixer

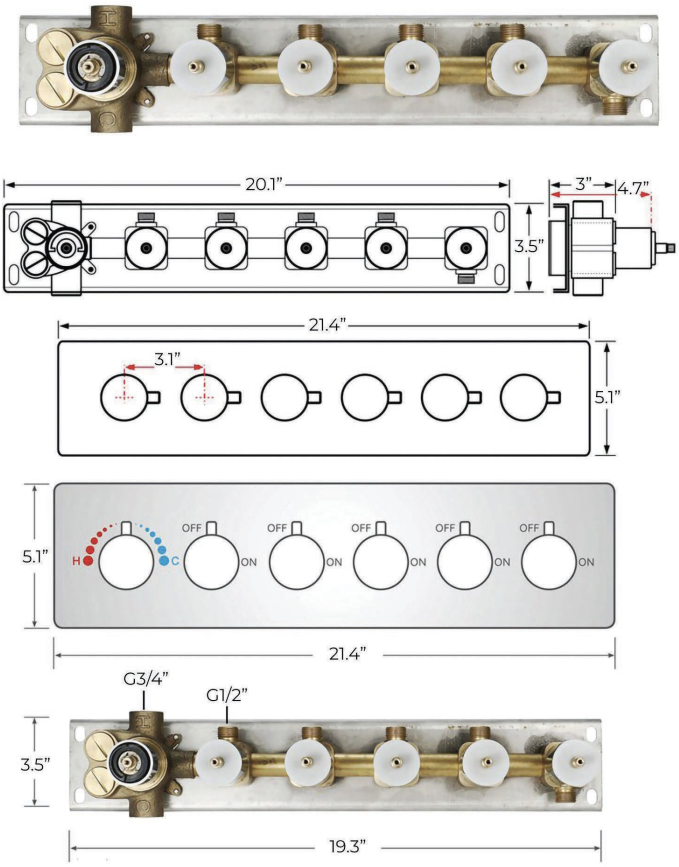

Spout

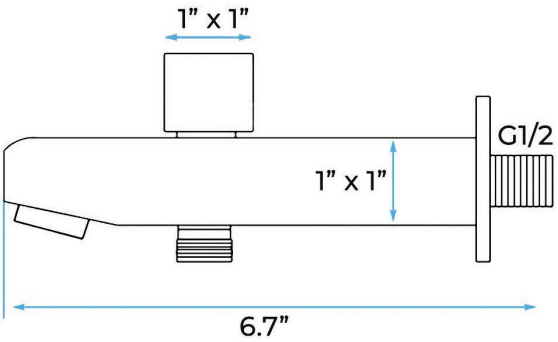

Hand Shower

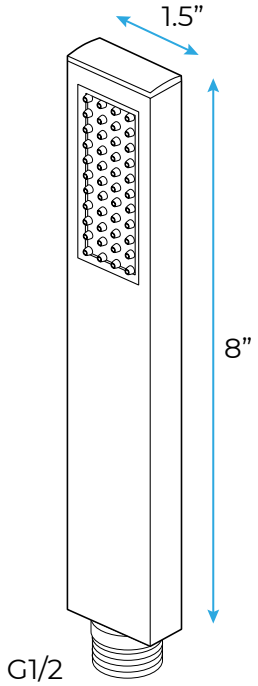

Flow Rate: 2.0 GPM / 7.6 LPM
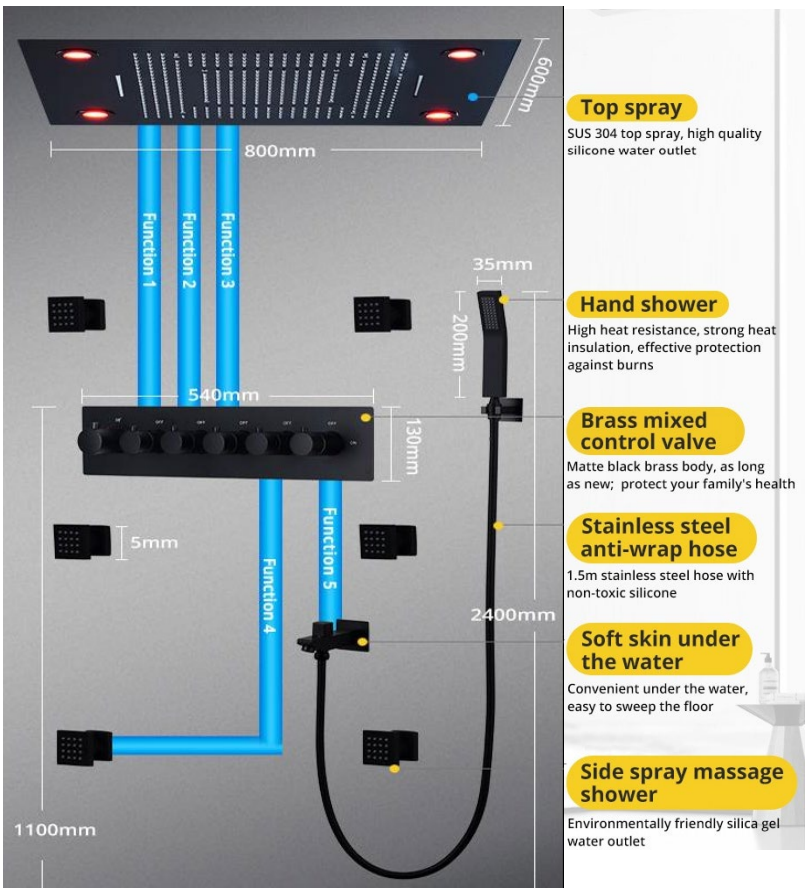
Shower Mixer Connections